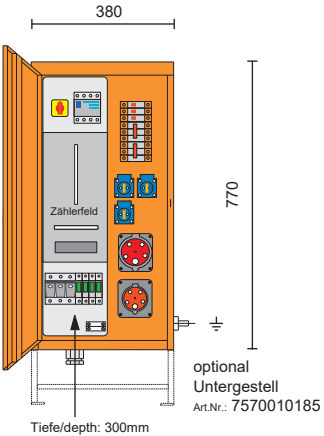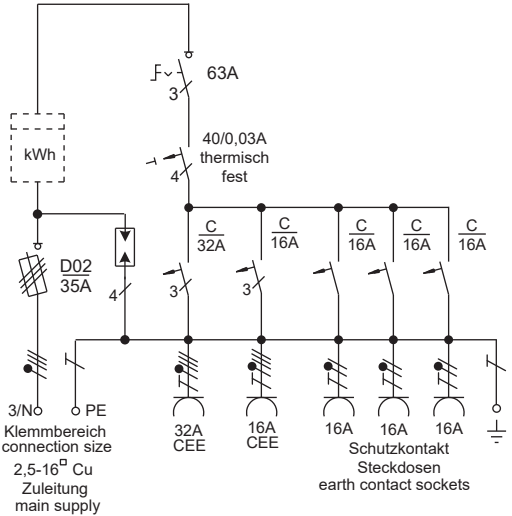Typ: **M-AVEV 35/11-3/V1/HS/A/OÖ** **Art.Nr.:** **690000014**